A low-cost solar cooker for the developing world

4 million people die each year from respiratory diseases caused by smoke inhalation from fuel used for cooking. Solar cookers are an innovative solution to this problem, which could enhance the quality of the lives of women and children.

UNIVERSITY OF OXFORD

energy.ox.ac.uk

A new solar cooker has been developed at the University of Oxford, demonstrating how fundamental research can lead to very practical applications. Originally, Professor Nick Jelley was working on maximising the light collected from solar neutrino interactions in the Sudbury Neutrino Observatory (SNO). For this he used Winston cones, parabolically shaped devices with a reflective inner surface.

These concentrators had to survive many years under water. An exhaustive search for a suitably hard wearing and affordable material eventually led to a design with 18 curved reflective strips.

Now, Professor Jelley and his colleagues in the Department of Engineering have discovered that the same design principle could lead to lower cost, durable and more effective solar cookers. The Winston cone as a secondary concentrator could result in higher temperatures.

The new design has been adopted by Dytecna Ltd. and prototype cookers are now being built for field trials in Kenya.

No other solar cooker system so far developed can concentrate so much naturally available renewable energy into such a compact and usable solution.

Research funded by the Leverhulme Trust showed how two single curvature surfaces can focus sunlight in a suitable way for a solar cookers. The combination of a conical and a parabolic mirror directs the sun's energy to the underside of a cooking platform. The single curvature surfaces in the concentrator allow the reflective surfaces to be formed from hardwearing flat reflective sheets. This approach reduces costs and enables the concentrator to be flat-packed–an essential requirement for disaster relief operations. The design is robust and easy to assemble.

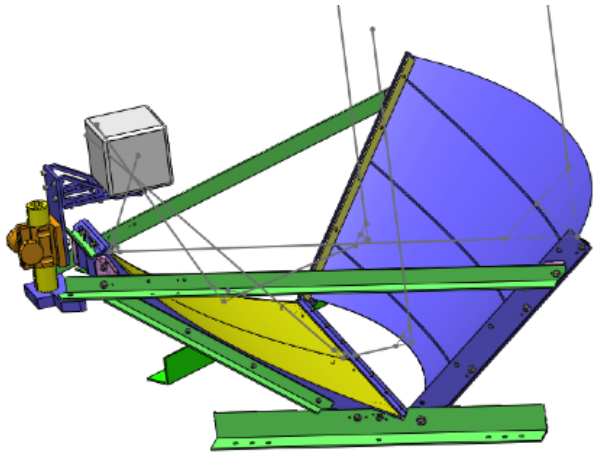

With direct sunlight the cooker is designed to provide heating in excess of 200°C and can be used with a saucepan on a cooking surface, with an oven, or just with a suspended pot, at a standard worktop height. It is comfortable to use, particularly for the elderly or infirm, and much more hygienic than a cooker placed directly on the ground.

To track the sun, the mirror system merely has to be rotated about a 'horizontal' axis during the day; the axis is altered weekly to follow the seasonal variation in the sun's path.

With simple additions it may also be used to dry food or as a water sterilisation system, enabling the use of scarce or contaminated water resources and helping in the prevention of sickness and disease.

The forthcoming Kenya trials (funded by an STFC mini-ips) and their evaluation will open up other exciting areas of research: thermal stores using phase change materials, which will not only enable evening cooking but may also use thermoelectric generators to provide electricity for lighting and mobiles (both web and phone).

Energy .ox.ac.uk

For more information contact
N.Jelley1@physics.ox.ac.uk
or visit energy.ox.ac.uk/solar